The 9th International Symposium on Automation and Robotics in Construction June 3-5, 1992 Tokyo, Japan

Study on Underground Space Excavating Machine

Hironori Adachi, Tatsuo Arai, Keiko Homma
Mechanical Engineering Laboratory, AIST, MITI
Namiki 1-2, Tsukuba, Ibaraki, 305 Japan

Tatsuya Nakamura
Mie University
Kamihama-cho 1515, Tsu-shi, Mie, 514 Japan

Hiroshi Yoshinada
Komatsu Ltd.
Manda 1200, Hiratsuka,Kanagawa, 254 Japan

ABSTRACT

A National Research and Development Program on Underground Space Development Technology has started in 1989. In this program, an automated excavating machine will be developed to construct an underground dome. This paper describes three basic studies, locomotion system, manipulation system, and task planning system, which are required for the excavating machine. For the locomotion system, a pair of crawler and four legs are provided to perform the effective locomotion on the unstructured terrain. Parallel link mechanism is applied to the manipulation system since it has advantages such as large load capacity, simple mechanism, and good durability. Appropriate task planning including real-time prediction of soil behavior is effective for automated excavation.

1. INTRODUCTION

Japan is a mountainous country and her plains are densely populated especially in large cities such as Tokyo, Osaka, etc. The Japanese Ministry of International Trade and Industry (MITI) has started a National Research and Development Program on Underground Space Development Technology to establish a new frontier at depth of greater than 50 meters below ground level. In this program, an automated excavating machine will be developed to construct an underground dome of approximately 100 meters diameter and 30 meters height. The Mechanical Engineering Laboratory is engaged in the development of key technologies for the machine and has started basic studies on 1) locomotion system, 2) manipulation system, and 3) task planning system.

In our preliminary design, the machine system should consist of a powerful manipulator on a vehicle with a task planner. The excavating machine is required to move around and execute the excavation task effectively on unstructured terrain. To satisfy this requirement, a pair of crawler and four legs are provided to the locomotion system. The crawler is used for relatively fast and distant locomotion between local task sites, and the legs are used for local locomotion to assist the excavating operation. Since the excavation task requires powerful operation, parallel link mechanism is applied for the manipulation system. Parallel link manipulator has advantages such as large load capacity, simple mechanism, simple inverse kinematics, and good durability. Moreover, appropriate task planning including real-time prediction of soil behavior is essential for the efficient task execution.

2. LOCOMOTION SYSTEM

2.1 Requirements for Locomotion system

Locomotion capability is essential for the excavation machine to perform the excavation task for constructing the huge dome. Locomotion system must have the function not only for locomotion but also for assisting excavating operation because it is contact point between the machine and the supporting land surface. The following requirements must be considered for the locomotion system.

(1) Adaptability to rough terrain

There is a mixture of fragile rock, earth and sand at the work site, and the land surface is complex and rough. The excavating machine must move around under such bad condition.

(2) Omni-directional locomotion (local locomotion)

To perform the excavating task efficiently, it is required that the machine moves in any direction smoothly from the current position without changing its orientation. This is called "omni-directional" locomotion and is useful for locomotion while doing some manipulation task. We call this kind of locomotion "local locomotion".

(3) Fast locomotion (global locomotion)

Fast locomotion is required when the machine moves between the work sites. In this case, moving distance is generally longer than that of local locomotion. Therefore, we call this locomotion "global locomotion".

(4) Supporting capability

The excavating task produces much reaction force between the machine and the land surface. The locomotion system should actively produce this reaction force and assist the manipulator work efficiently.

(5) Stability

The locomotion system support the manipulator which has a large motion range while working. The locomotion system should stably support the whole machine even when the manipulator changes its position of the center of the gravity.

(6) Posture change capability

The excavation cutter should be controlled to realize appropriate positioning and orienting for the task. Although this is basically done by the manipulator, a redundant motion would be desirable to perform the task efficiently. It is preferable that the locomotion system is capable to change the posture of the whole machine in order to add dexterous motion to the manipulator.

Three types of locomotion, wheel, crawler, and leg, are currently employed for the machines. However, no locomotion type satisfies all the requirement. Although legged locomotion has many merits, it is not capable of fast locomotion. Therefore, a hybrid locomotion system which has legs and crawler is select for the excavation machine. Crawler is used for global locomotion and legs are used for local locomotion. Legged system is capable of moving on rough terrain, omni-directional locomotion, producing force actively, making wide supporting pattern, and changing machine's posture.

2.2 Experimental vehicle

To investigate the basic characteristics of the leg-crawler hybrid locomotion system, a experimental vehicle was constructed as shown in Fig.1. This vehicle has four legs and a pair of crawler. Fig.2 shows the configuration of this vehicle, and table 1 shows the basic specification. Since the vehicle is employed for basic study, it is a small scale model. Each leg has three degrees of freedom, and its configuration is shown in Fig.3. As known by this figure, a leg consist of two-dimensional planar link mechanism and a revolution joint which rotates the planar link mechanism. The planar link mechanism is driven by two DC servo motors and two ball screw mechanisms. The revolution joint is driven by a DC servo motor and spur gear mechanism. A pair of crawler is driven by one DC servo motor. Concerning about sensors, each leg has 6-axis force/torque sensor at the ankle. As attitude sensor, pendulum type sensor and rate gyro are attached on the body. Control computer system and electric power source are separated from the vehicle, and they are connected by cable. The vehicle has approximately 10 kg payload and it is possible to attach a small manipulator.

2.3 Navigation system

Navigation of the excavating machine presents difficult problems different from that of ground vehicle. In the case of ground vehicle, the combination of deadrecogning and utilization of land marks are used. There are two problems if this method is applied to the underground situation. One is that land marks are not available, since shape of the dome itself is changing. Therefore, if we wish to use any mark, we have to set some known marks which are separate from the dome. Many marks are necessary in the case of complex underground space and this method becomes infeasible, since the sight is intervened by the wall of the underground. The other problem is that odometer is not available because of slippage of wheel. To cope with these problems, a new method utilizing a flying sensor was proposed and its basic experiment was conducted in our research.

In the proposed method, a flying object that has a sensor, such as a gyroscope, runs inside a guide tube between the base and the machine, and measures location and orientation at some interval as in Fig.4. A configuration for the sensor and a measuring algorithm will be discussed in the following.

Sensor system

Fig.5 shows a configuration of a flying sensor system in the guide tube. The flying sensor has wheels to reduce a friction between the tube and itself, a driving tether, gyroscopes and accelerometers. Defining sensor coordinates $x_b y_b z_b$ fixed on the flying sensor, three accelerometers and three gyroscopes are set on the coordinate axes to measure the acceleration vector d^2r/dt^2 and the angular velocity vector wb. In this method gyroscopes and accelerometers are fixed on the flying sensor and it is called strap-down method.

Measurement of orientation

Let T be a homogeneous transformation matrix between inertia coordinates (or base coordinates) and the sensor coordinates.

$$T = \begin{pmatrix} l_x & m_x & n_x \\ l_y & m_y & n_y \\ l_z & m_z & n_z \end{pmatrix} \qquad (1)$$

where l, m, n represent unit vectors of each sensor coordinates direction. The orientation of the sensor is defined by the matrix T and this satisfies the following equation.

$$\frac{dT}{dt} = T \begin{pmatrix} 0 & -\omega_{zb} & \omega_{yb} \\ \omega_{zb} & 0 & -\omega_{xb} \\ -\omega_{yb} & \omega_{xb} & 0 \end{pmatrix} \qquad (2)$$

Thus, the orientation can be derived by integrating the equation. The orientation is expressed by using roll, pitch, and yaw angles in the actual application.

Measurement of location

Defining the vectors $\mathbf{r}$ and $\mathbf{r}_b$ which represent a position of a certain point on the sensor in the base and sensor coordinates respectively, then the following equation can be derived.

$$\frac{d^2\mathbf{r}}{dt^2} = \frac{d^2\mathbf{r}_0}{dt^2} + \frac{d^2\mathbf{r}_b}{dt^2} + 2\omega\times\frac{d\mathbf{r}}{dt} + \frac{d\omega}{dt}\times\mathbf{r}_b + \omega\times(\omega\times\mathbf{r}_b) \qquad (3)$$

where × is the vector cross product, and $\omega=(\omega_{xb}, \omega_{yb}, \omega_{zb})^T$. The position $\mathbf{r}$ can be found by integrating the equation.

3. MANIPULATION SYSTEM

An excavation manipulator has been developed based on the parallel link mechanism. The parallel link mechanism has many advantages over a conventional serial link manipulator, for example, big force and torque produced at the end-effecter, light and compact mechanism in the moving part, simple inverse kinematics, etc. These characteristics are preferable for the application to the excavation task. Fig. 6 shows the developed excavation manipulator. It has six prismatic links between a base and an end-effecter, and each link is actuated by a DC servo motor. A link has a ball and screw mechanism with 5 mm lead which causes maximum speed of 300 mm/sec with no load and peak continuous force of 45.3 kgf. These result in maximum speed and force of 600 mm/sec and 50 kgf in horizontal/vertical directions, and 340 mm/sec and 150 kgf in approach direction. A link has a rotary encoder and a link length can be measured with a resolution of 0.0006 mm/pulse. Since it is hard to calculate the end-effecter location from the given link length, one of the six links has potentiometers to estimate the location. A position measuring accuracy of 0.5 mm at the end-effecter can be attained by using this method with a linearized difference method based on Jacobian.

A controller consists of 68020-CPU based VME-BUS computer and several DSP boards by improving a commercially available industrial robot controller. Fig 7 shows a block diagram of the controller. It has basic position servo for link, inverse kinematics, forward kinematics, interpolation for trajectory generation, motion level programing language, and interface with PC using dual port memories. Using these functions some basic motion experiments have been done, for example, trajectory control based on pre-programmed position data, bilateral master slave control using another parallel manipulator as master device by communicating through dual port memories.

4. TASK PLANNING SYSTEM

It is impossible for an operator to go into the work site which is located deep underground and filled with underground water. Therefore it is necessary to make task planning autonomously and to excavate automatically. For the effective task planning, the model which can express the shape and the hardness of the soil is needed. Thus we propose the modeling method using touch sensing. Generally laser range finders or ultrasonic sensors are used in modeling of the shape. Compared with them, touch sensing in automated excavation has advantage as follows.

1) The accurate data is available in the water contaminated with mud.
2) The data can be collected efficiently because both the position and the reactive force/torque at the sensed point can be measured at the same time.
3) Measurement can be executed during the excavation by merely attaching the probe to the excavation tool.

Now we explain a basic experimental system of the proposed method. In this system, a parallel link manipulator developed at the Mechanical Engineering Laboratory is used. A 6-axis force/torque sensor and a probe are attached to the end of the parallel manipulator. Measurement data is collected by following the algorithm shown in Fig.8. The data is sent to the computer, and the 3-dimensional shape and hardness model is calculated.

5. CONCLUSION

This paper describes a research concept and currently on-going research in key technologies required to excavate and construct an underground space. Locomotion system is discuss to enable the machine to move over rough terrain and to assist the excavating task, and the experimental vehicle and a navigation method are introduced. A parallel link manipulator for excavating task and its control system are shown. Moreover, a modeling method of the shape using touch sensing is proposed.

The authors would like to express their application to the office of National Research and Development program, MITI for the encouragement of our research project.

References

[1] Agency of Industrial Science and Technology, "National Research and Development Program (Large-Scale Project)",1990,p.14

[2] Adachi, H., et al., "Development of a Quadruped Walking Machine and Its Adaptive Crawl Gait", Proc. of Japan-U.S.A. Symposium on Flexible Automation, July 1990, pp.91-94

[3] Arai, T., et al., "Design, Analysis and Construction of a Prototype Parallel Link Manipulator", Proc. of IEEE Inter. Workshop on Intelligent Robots and Systems, July 1990, pp.205-212

[4] Homma, K., et al., "Spatial Image Model for Manipulation of Shape Variable Objects and Application to Excavation", Proc. of IEEE Inter. Workshop on Intelligent Robots and Systems, July 1990, pp.645-650

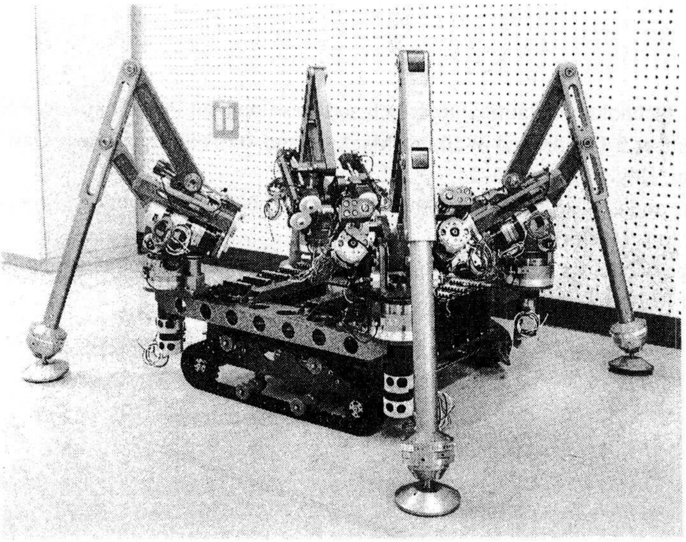

Fig.1 Picture of experimental vehicle

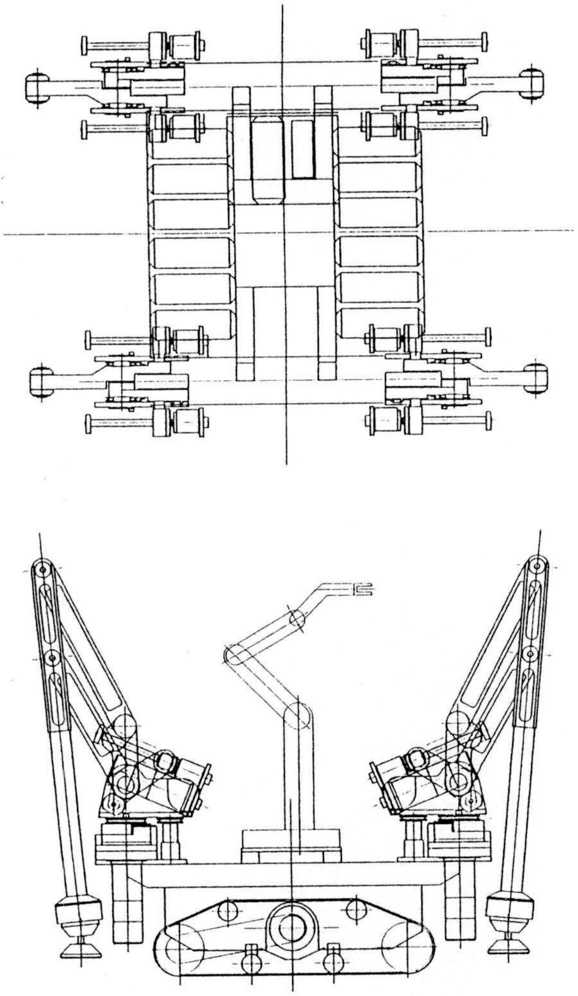

Fig.2 Drawing of experimental vehicle

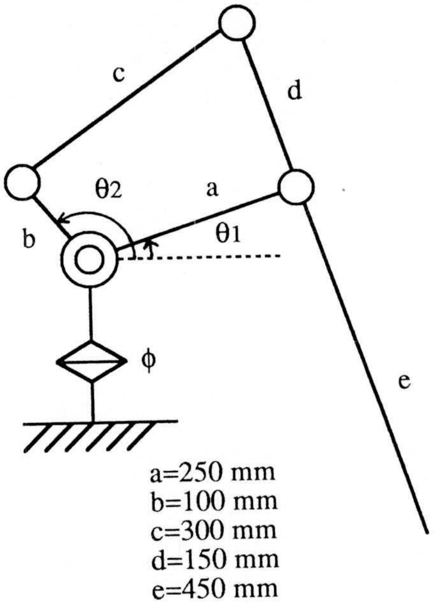

Fig.3 Configuration of leg

Table 1 Basic specification of experimental vehicle

Configuration	4 legs (3DOF) + 1 crawler (1DOF)
Length	700 mm
Width	700 mm
Height	400 mm
Weight	61 kg
Distance between legs front-rear right-left	 570 mm 570 mm
Leg movable range θ_1 θ_2 ϕ	 0 - 60 deg. 90 - 165 deg. -45 - 135 deg.
Actuator	13 DC servo motor (110 w)
Pay load	10 kg
External sensor	force/torque sensor (6-axis, each leg) attitude sensor (pendulum type and rate gyro)

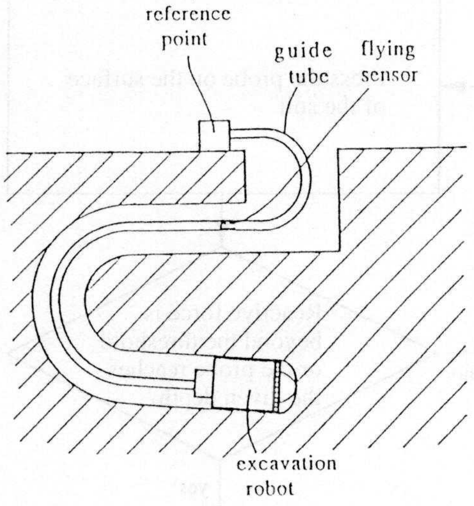

Fig.4 Principle of measurement system

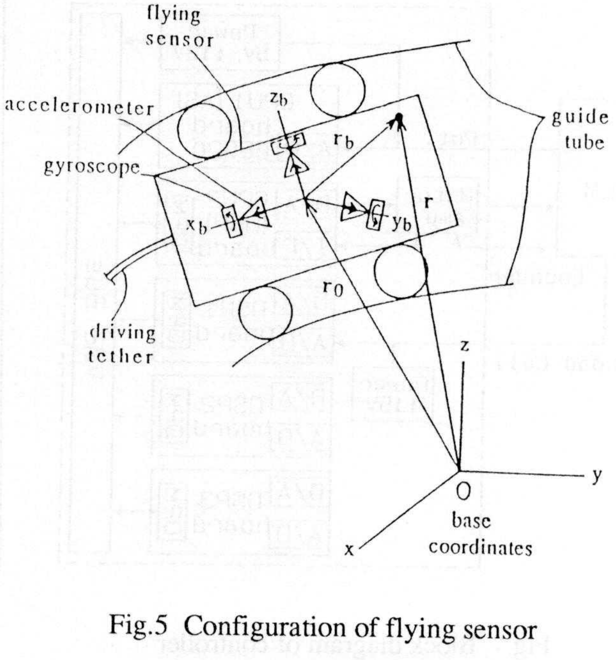

Fig.5 Configuration of flying sensor

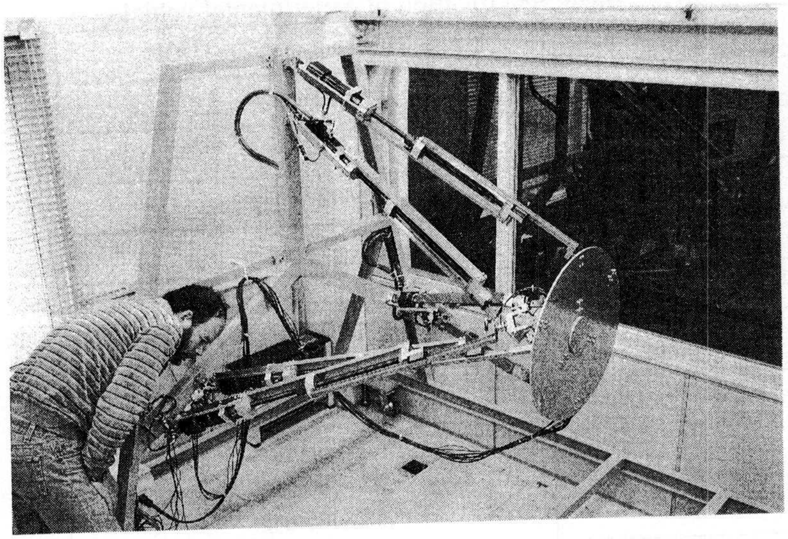

Fig.6 Picture of excavation manipulator

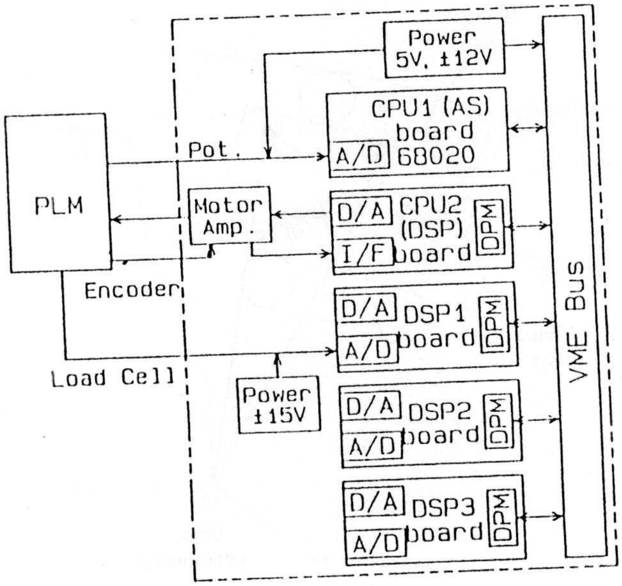

Fig.7 Block diagram of controller

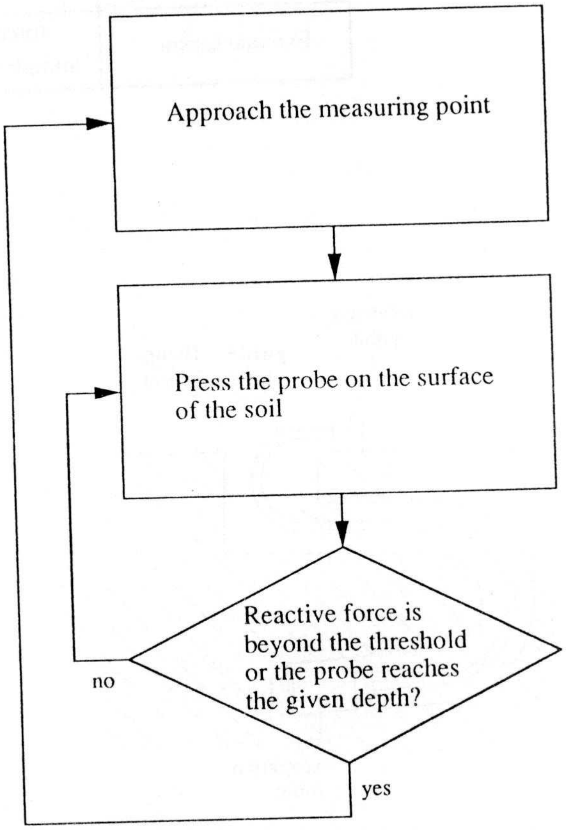

Fig.8 Measurement algorithm