DEVELOPMENT OF MOBILE TILE CLADDING ROBOT SYSTEM

Hannu Lehtinen, Lauri Koskela, Hannu Sainio, Mika Matikainen,
Karl-Johan Seren, Taisto Kemppainen
Technical Research Centre of Finland (VTT), SF-02150 Espoo

ABSTRACT

An inner construction work robot test system has been designed and evaluated at VTT. The designed, but partially realized, robot system could reach and transfer a pay-load of 10 kg to any inner surface of such a room in any orientation, the maximum height of which is close to the required 3.2 m.

The system consists also of a track based vehicle and process tooling for automated cladding of ceramic tiles. The system can be moved on the construction site using its caterpillar track locomotion. It is connected to the stationary control equipment and energy source with a set of cables.

Wall cladding with ceramic tiles is the first test application. Suction cup based gripper equipped with three ultrasonic and a six axis Force/Torque sensor is used. Information of these sensors is fused to decrease radically the ± 50 mm inaccuracy of all nominal positions and navigation error.

1. INTRODUCTION

It was decided at VTT to gain practical experiences on construction robotics by constructing a robot system capable for autonomous and unmanned inner work tasks for a period of at least half an hour, and longer periods with human assisted material flow. Wall cladding with ceramic tiles was chosen to the first test application after several years of studies [1]. The related development at Technion [2] has been followed keenly.

The economical viability of an inner work robot system increases with the number of tasks it is able to perform during progress at construction site. In order to perform several tasks it has to reach any inner surface of a room in any orientation. Rooms are in most cases lower than 3.2 m in residential and commercial buildings.

The weight and dimensions of the complete mobile unit is one of the main problems. The system should be movable through normal corridors, doors and other openings. The load limit for residential floors is 4000 N/m^2 (in Finland).

The varying range of construction tasks requires several different approaches to design of an inner work robot system. For example the mechanisms for surface coating by spraying or masonry with large blocks require totally different mechanisms.

The following aspects have to be considered also:

- minimized disorder
- locomotion on uneven surface containing rubbish as well as in staircases
- dusty environment and processes
- blow due to non-installed doors and windows
- humidity changes
- temperature changes
- economy through operability by one operator
- capable of at least half an hour unmanned operation

It is quite difficult to develop on site automation for construction, since construction procedures, equipment and components are based on long experience of manual construction. In spite of the large number of commercially available industrial robot models and types, there are no multipurpose robot arms on the market to fulfill all or most of the requirements. Development of such an arm requires large technical resources not easily available for the construction industry. Also the profitability of autonomous robotics in construction is not clearly proven so far. It is the objective of VTT to show what is possible with the technology of today and set new objectives for future research work.

2. BASED ON COMMERCIAL COMPONENTS

The inner work robot system designed (Fig. 1) can reach any surface of a room, the height of which does not exceed 3 m. The system based on of-the-self components consists of a small electrohydraulic caterpillar track vehicle (Lastbärare HLB 9389 Comatech AB, Sweden), an industrial robot (NOKIA NRS 10), an lifting mechanism and process equipment. Unfortunately the robot control system can not be miniaturized to be installed in the vehicle itself. The cable conduits can, however, also be used to transfer electrical energy to the track vehicle.

A track vehicle is preferable on construction site floors in comparison to so called wheel equipped AGV vehicles. The AGV's are usually intended for material transportation on even floors in storage facilities. Their weight often exceed 1000 kg. They might easily get stuck with construction rubbish and in joints or seams in the floor. The chosen track based vehicle can alternatively be equipped by the operator with manual pendant and longer energy cable in order to be moved within construction site and even in the terrain. The vehicle can enter and leave staircases with help of wooden rails.

The base of the vehicle is originally intended for human guided transportation on construction site. Its hydraulic pump is driven by an AC-motor. The hydraulic system of the vehicle is also used for the lifting mechanism and the support legs.

The capability to reach all surfaces of a room with 10 kg payload in any orientation has been realized in the design by several means:

- lateral movements in the room on caterpillar tracks
- working area of the robot arm
- lifting mechanism that enables robot to reach both floor and ceiling but also lower parts of walls

Two different lifting mechanisms have been designed. An inclining platform (shown in the Fig. 1), onto which the robot arm is attached, is mechanically simple. A linear hydraulic telescopic cylinder under the robot arm proved also to be mechanically possible even with the required low end position. The cylinder is supposed to lift the robot arm about 1 m. The reachable floor and lower wall area will be larger with the robot arm attached to the cylinder than to the tilting platform.

Reaching lower parts of walls with the tool in horizontal orientation was the hardest nut to crack; the tool length will not help the robot to reach lower in this case.

Minimizing the weight of the vehicle was one of the key issues. The weight of the track vehicle with some process equipment is 400 kg. The weight of the robot arm is 180 kg without the normal amplifier unit at the base of the robot. The maximum weight of the process material will be about 150 kg.

Locomotion problems caused by the 20 m long cable between the robot controller and the track vehicle can be reduced by reeling the extra cable with continuous tension and by attaching some small wheeled carriages to the cable.

Although designed and prepared for, the lifting mechanism and detaching the amplifier unit has not been realized before writing this presentation. Showing the general functionality was considered more important. The development was dealt to two parts: vehicle control system [3] and stationary cladding process development.

3. WALL CLADDING WITH CERAMIC TILES

Wall cladding with ceramic tiles was chosen as the first test application due to the quite limited material flow. The seam filling and attachment of cut tiles are left to human workers. The first outlines of the ceramic tile cladding system is shown in the Fig. 1.

The designed ceramic tile cladding process proceeds as follows:

- the vehicle moves to the correct position in the room with the robot arm folded to transport position
- the supporting legs are landed on the floor
- the robot arm checks the position of the task coordinate system with the help of the distance sensors by measuring three positions on each plane

- the robot fetches two tiles with the suction cup gripper from the inclined storage rack
- the tiles are moved to mortar pump nozzle, which extrudes a tile broad stripe of mortar to the bottom of tiles, while the robot moves them over the nozzle with proper speed
- the robot attaches the tiles to surfaces according to nominal positions defined in an external computer
- when the system starts to work with the upper part of the room in the actual vehicle position, the lifting mechanism is moved to the upper end limit wherefrom the robot can reach upper parts of the room but also the process equipment on the vehicle

The search for the previous tiles will not take long in cases where the robot knows where the previous tile was installed. This happens, when neither the vehicle nor the lifting mechanism have been moved during the time the previous tile was attached and this one is to be attached. Longer searching distances, thus more time, are needed after the vehicle has been moved. Cladding of surfaces with openings can be started from a support board, that simulates the edges of previous tiles.

3.1 Intelligent gripper

The suction cup based gripper (Photo 1) is equipped with guiding pins, three ultrasonic distance sensors, vacuum generating ejector, pneumatic valves and a six axis Force/Torque sensor [4] between the wrist and the tool flange. The gripper handles normally two tiles simultaneously, but it can also grip only one tile to either of its two suction cups.

Two sides are free so, that the gripper fits into a perpendicular corner of three planes. One of the distance sensors can be moved with a pneumatic piston over the edge of a tile, when two tiles are in the gripper. This was found to be necessary in simulation of tile cladding of a rectangular partition. The piston is also extended, when the alignment with the tiles in the gripper with the wall plane is checked. Such movements take usually about 4 s. This is done after about 20 tiles inserted to compensate the inaccuracies of the robot world coordinate system. The found new orientation is kept in the following nominal tile position.

The distance sensors (OMRON E4DA) measure distances between 50 and 100 mm with accuracy of 0.2 mm. They are also used to search for the edges of the previous tiles. The required parallellity for the sensor to measure properly is about ± 3 degrees.

The main tasks of the F/T sensor are:

- detect any contact during searching movements
- securing all rapid transfer movements by stopping them if large forces or torques are detected (collisions)
- secure, that ceramic tiles are met properly in the feeding racks

- inform, when the pressing attachment force is sufficient and no extra torques are detected during attachment (extra torques could imply attachment on the edge of the previous tile)

Since the positions of the guiding pins can be adjusted manually (± 5 mm), different tile sizes can be used the same tool; a new gripper has to be exchanged for other tile sizes.

3.2 Work frame searched

The tiles are attached to the wall in a rectangular coordinate system called here "the work frame". The distance between each nominal tile position is constant in vertical and horizontal direction. The position of the work frame has to be very accurate in the world coordinate system of the robot arm before attachment can be tried.

The search is made according to the figure 2 in the case of plain wall and floor. Positions, wherefrom searching in tool coordinate system is started, are shown as balls. Only three of start positions need to defined in advance: E and D are calculated based on A, B and C. The method of transferring the work frame as start positions of searching and then indexes to nominal positions, that should have a tile, is also suitable for automatic program generation of cladding movements from construction a database.

The work frame (X,Y,Z) is calculated based on the positions where a contact to the wall was detected. The vector V̲ between the contact positions found after starting from A and B, is used to calculate E and D from C. Then the work coordinate system is defined by the contact position corresponding to C, D and E. The result is that the horizontal seams are aligned with the floor.

The F/T sensor is used to make the search movement. These movements are rather slow in order to increase accuracy. At the end of the work frame definition the tool moves to the parallel orientation with the work frame and checks the alignment with the ultrasonic sensors. This orientation is used later on. The work frame definition takes about one minute to be executed.

A method to calculate the nominal positions for each tile and docking position for the vehicle in a case of rectangular partition is presented in the Figures 3 and 4. The Fig. 3 shows the tile positions, that can be reached from one vehicle position. The Fig. 4 shows, how the rectangular partition is dealt with to minimize number of docking positions.

3.3 Mortar is used

Special mortar for ceramic tiles (Partek FIX FB12) is used, since the system is designed to clad also floors. The wall surface is gypsum board (Gyproc). The mortar is pumped continuously through a mixer to a VTT made nozzle (Photo 2), the edge of which is used to groove the mortar under the tiles as the gripper passes by the nozzle.

The mixer (Putzmeister SprayBoy) is quite heavy and large, but the smallest suitable product found from the market.

The wall attachment of freshly assembled ceramic tiles has in the majority of the tests been sufficient, with no (or only minimal down-sliding or dripping. There are, however, some indications, that the mortar is very sensitive to fluctuations in the water contents of the slump. This can be noted as down sliding of tiles due to the gravity. The reason for this seems to be a slight over-dosage of water in the slump.

3.4 Attachment checked by forces

The attachment process is started from the nominal attachment position close to the wall. All movements later on are made in the tool coordinate system. If the gripper is not parallel enough with the wall, the alignment is checked and the gripper aligned with wall.

After a relatively rapid movement towards the wall a search movement, that waits for the opposite attachment force, is started. Also large lateral torques stop the movement indicating that something has gone wrong. If only the normal opposing force is detected, then the tiles are released after 1 s delay.

When the vehicle has moved, the exact position of the previous tiles is not known. Therefore such subprograms have been developed, that search the edges of previous tiles along lateral tool coordinate axis. The attachment is then started from the position defined by these edges. This lateral searching can be included to the movements by a boolean variable; thus the search can be activated by the operator according to experience of the accuracy of the robot world coordinate system. The search takes usually about 4 s, when horizontal and vertical neighboring edges are searched.

4. RESULTS

When this paper is written, the following status and results have been reached:

- the vehicle [3] is completed to be integrated with the robot arm and cladding system
- seam straightness and regularity are close to the Finnish "Code of building practice" (RYL 90)
- the world coordinate system of robot arm seems to accurate enough; thus parallel searching of previous edges is not always necessary
- cycle time per tile is about 21 s with parallel searching and about 17 s without searching
- with estimated market price of the system and present interest rates and salaries the total cost of using the system is about 15 percent higher than manual work (75% usability and 8 h/day working time used) in Finland in 1991 according to the economical analysis made in a case of a health care station [5]. If two shift work is used, estimated cost is 16 percent less in site size of 1500 m² tiled area. [5]

5. HOW TO CONTINUE?

The cladding process will be integrated in the near future on the vehicle. Since the amplified unit of the robot remains under the robot arm and the lifting unit is not realized, an area, the height of which is only about 2 m can be reached. The floor can not be reached at this stage.

Improvements in the future projects could be:

- integration of an external position measurement system to the carriage; the one based on ultrasonics developed at CSTB [6] sounds promising and economical, since the internal position measurement system [3] can manage with slow rate external information
- improvement of the gripper to center tiles actively by a pneumatic piston
- realization of the lifting mechanism
- automatic generation of vehicle and robot arm movements from constaruction database

6. REFERENCES

1. Koskela, et al., The feasibility of construction robotics in Finland and Norway, 6th Int. Symp. on Automation and Robotics in Construction (ISARC), San Francisco, June 6-8, 1989, proceedings, pp. 80-86

2. Rosenfeld, Warszawski, Zajicek, Robotic performance of interior finishing works: development of full-size applications, 7th Int. Symp. on Automation and Robotics in Construction (ISARC), Bristol, June 5-7, 1990, proceedings, pp. 63-70

3. Matikainen, Lehtinen, Control system of a track vehicle for construction automation, to be presented, 8th Int. Symp. on Automation and Robotics in Construction (ISARC), Stuttgart, June 3-5, 1991

4. Lédeczi, Lehtinen, Bánki, Intelligent force-torque sensing functions enable easy interface to robots, 11th Int. Conf. on Assembly Automation, Detroit, Nov. 12-14th, 1990, SME

5. Koskela, et. al., Rakentamisen sisävalmistustöiden robotisointi, (Robotization of inner works of construction), in Finnish, VTT series, draft, 1991

6. Salagnac, Vinot, Pujol, Positioning with ultra sonic sensors: review of techniques and presentation of a new system, proceedings, 7th Int. Symp. on Automation and Robotics in Construction, 5-7 June, 1990, Bristol, vol. 1, pp. 253-260

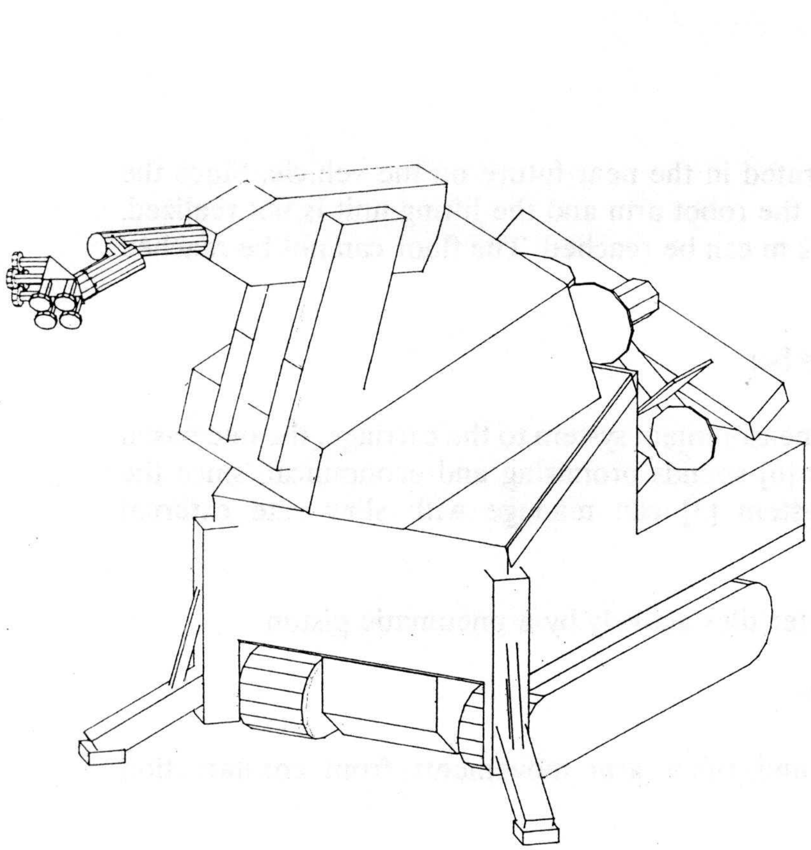

Fig. 1. Ceramic tile cladding system

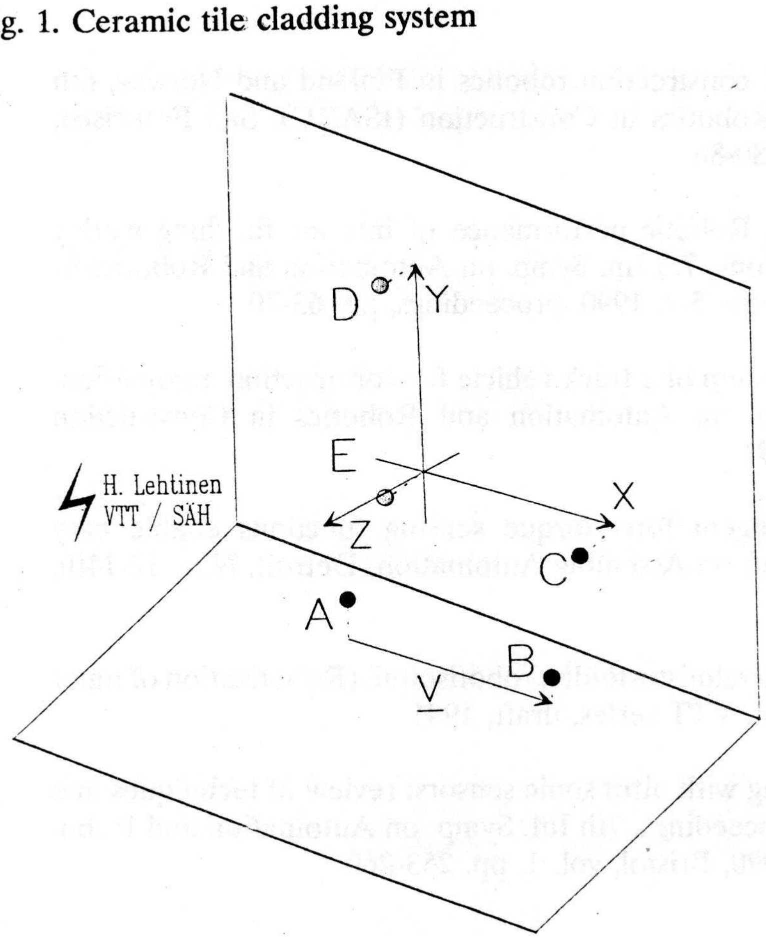

Fig. 2. Searching of the work coordinate system by touching floor and wall

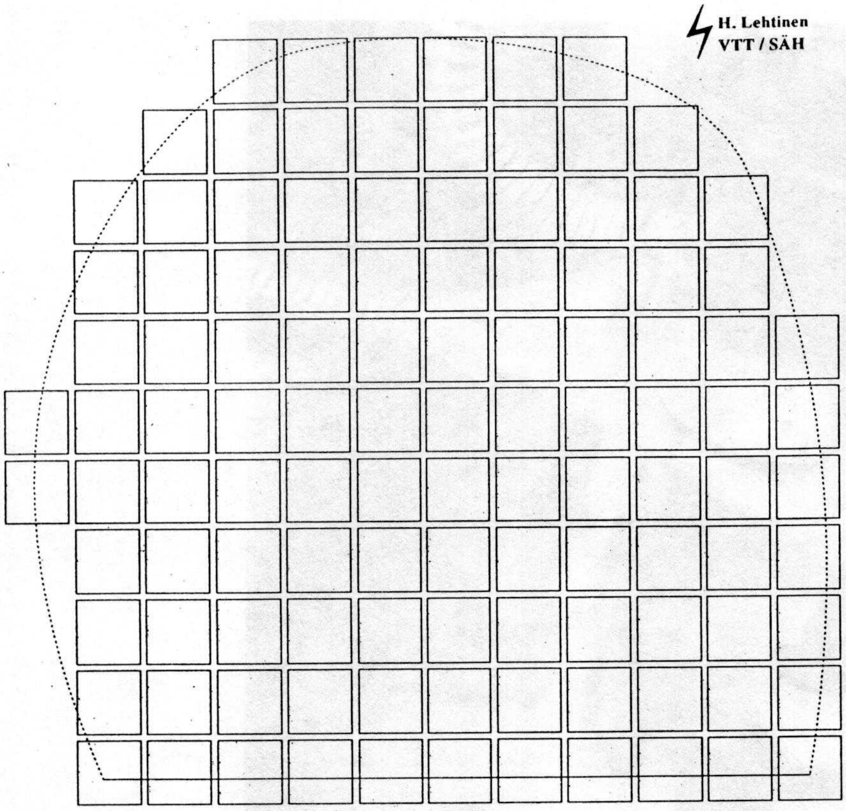

Fig. 3. Tiles reachable from one docking position of the vehicle

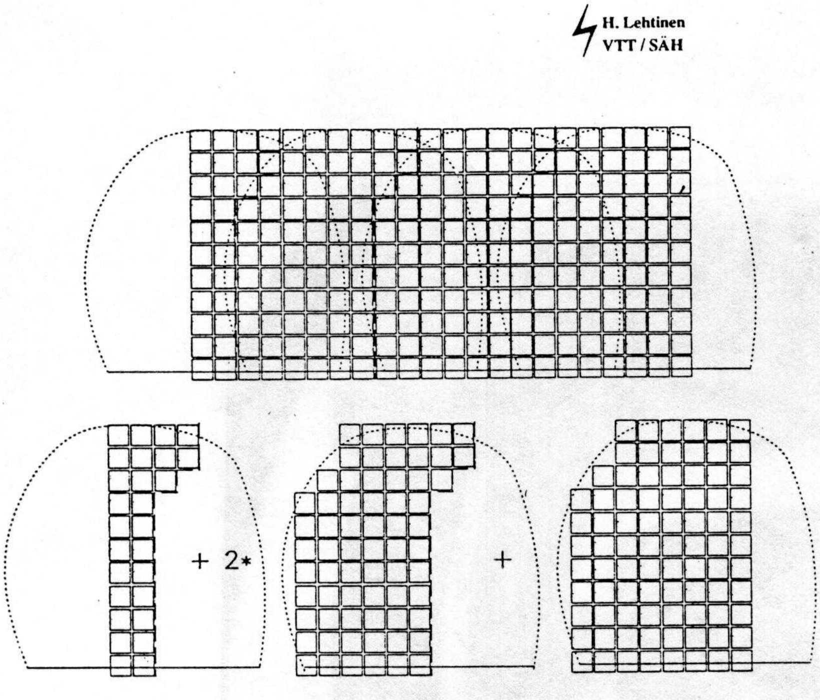

Fig. 4. Docking positions and tiling clusters needed for tile cladding of a rectangular partition

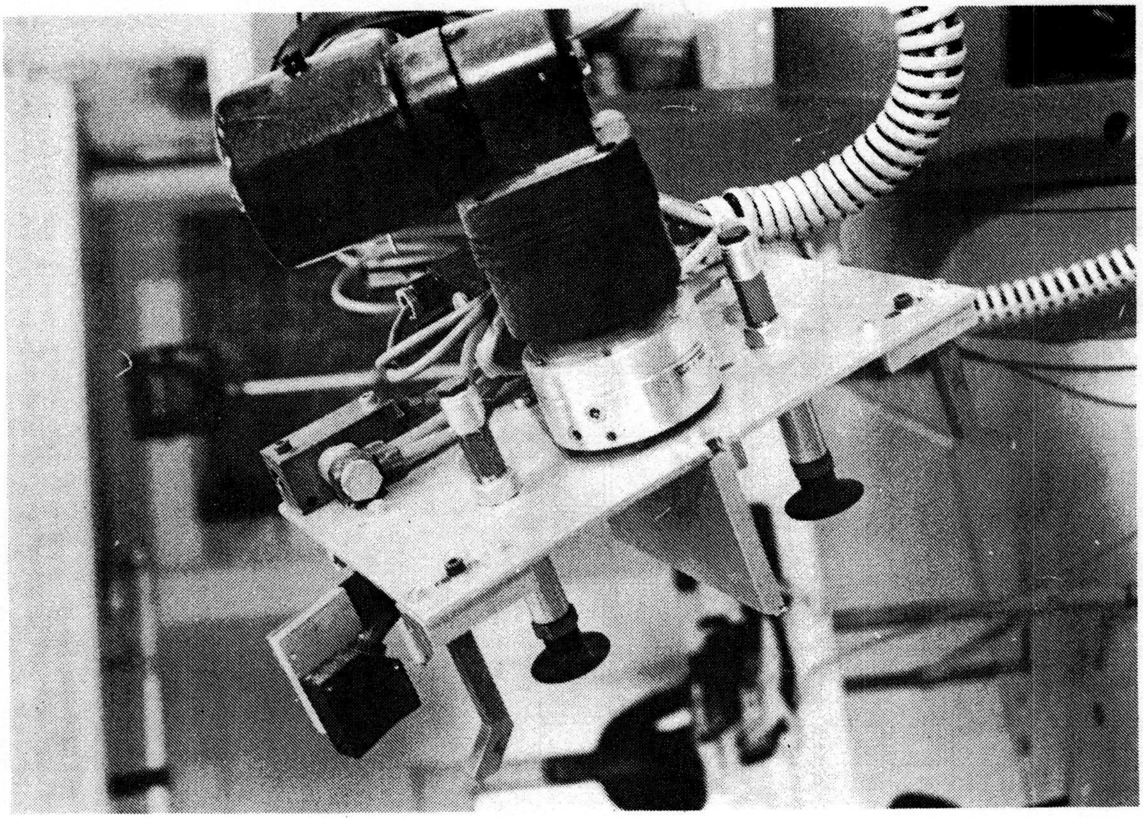

Photo 1. Suction cup gripper for two ceramic tiles

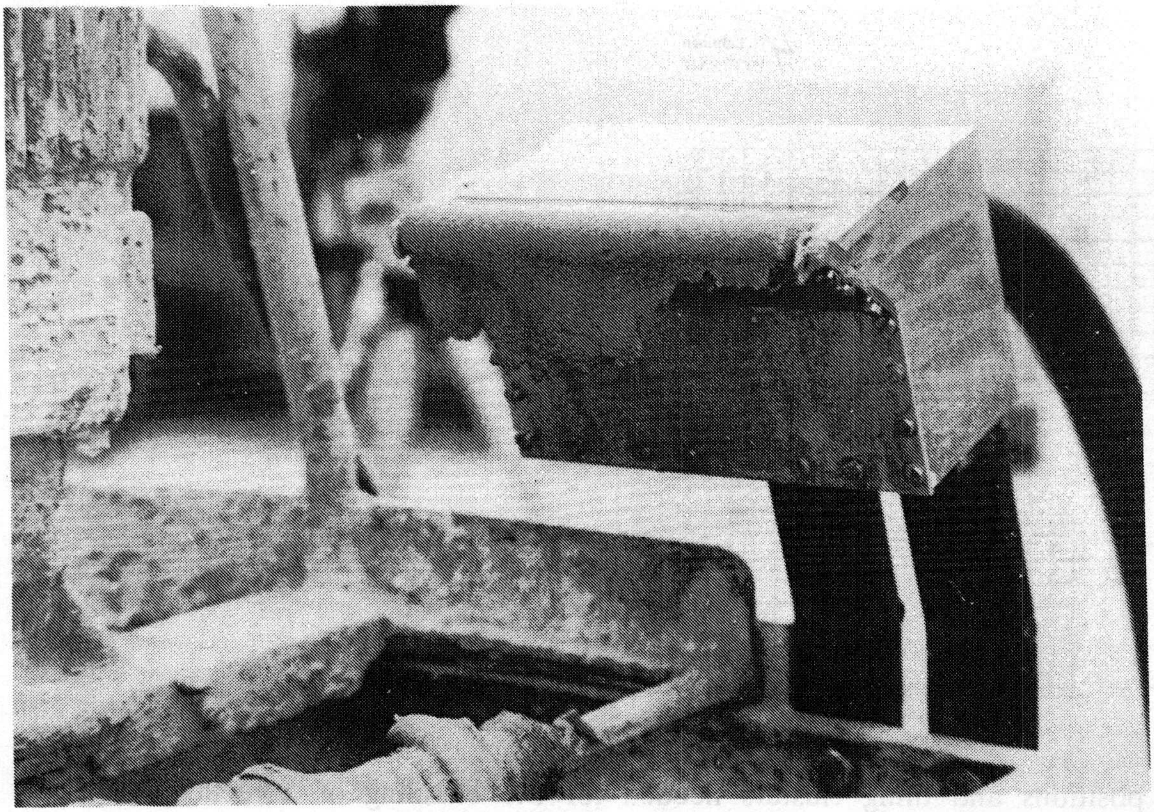

Photo 2. Grooved mortar nozzle producing a band of mortar