AN AUTOMATED CONSTRUCTION ERECTION SYSTEM

Dr. B. Vincent Viscomi, Professor
Civil Engineering Department
Lafayette College, Easton, PA, USA

Dr. N. Duke Perreira, Assoc. Professor
Mechanical Engineering and Mechanics Department
Manufacturing Systems Engineering Program
Lehigh University, Bethlehem, PA, USA

Center for Advanced Technology for Large Structural System-ATLSS
LEHIGH UNIVERSITY
Bldg. H, Mountaintop Campus
Bethlehem, Pennsylvania, 18015, USA
Tel: 215-758-3535, Fax: 215-758-5553

ABSTRACT

A series of new beam-to-column connections known as ATLSS connections are currently under development with an emphasis on cost-efficient fabrication as well as geometric configurations which provide an automatic self-guided erection feature to greatly facilitate initial placement. This feature will minimize human assistance during construction and will result in quicker, less expensive erection procedures where workers are less susceptible to injury or fatalities.

The ATLSS connections also possess the capability of being erected by automated construction techniques. This paper presents an overview and some details of **ACES**, **an Automated Crane Erection System which allows precise movement in six directions at the construction site.** ACES consists of: 1) a moving platform base, cable-driven, Stewart Platform used in locating, acquiring, moving, placing and securing structural and non-structural elements throughout the construction site; 2) construction elements incorporating ATLSS connections; 3) motion and sensor control software for movement within cluttered environments subject to wind gusts; and 4) the design and as built database. The technologies developed within this research effort are transferable to other potential applications such as warehousing, ship building and maritime application, decommissioning of nuclear facilities, mining, dredging and excavation.

INTRODUCTION

The Engineering Research Center for Advanced Technology for Large Structural Systems (ATLSS) was created at Lehigh University in 1986 by a grant from the United States National Science Foundation. The primary mission of the ATLSS Center is to serve as a focal point for research and education that will lead to technological developments which increase the competitiveness of the U.S. construction industry.

To meet this challenge, the ATLSS Integrated Building Systems (AIBS) program was developed to coordinate ongoing research efforts in automated construction and connection systems. As illustrated in Figure 1, the objective of this program is to

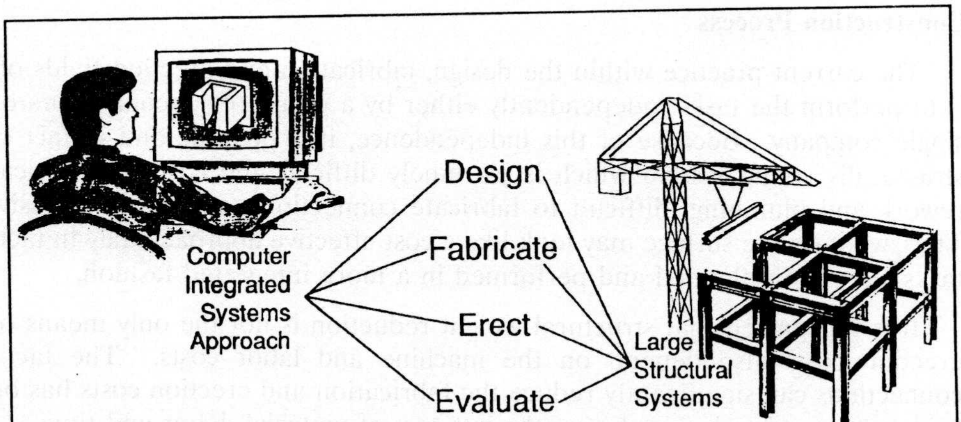

Figure 1 Objective of AIBS

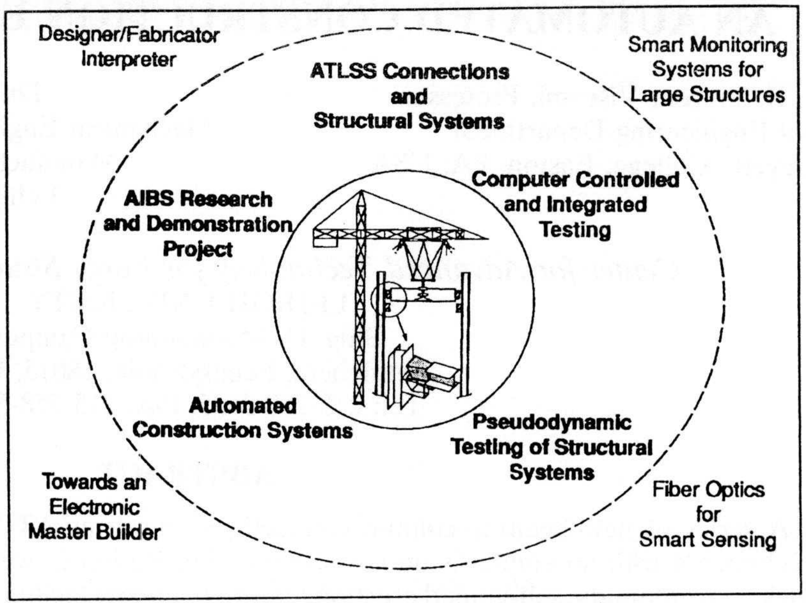

Figure 2 AIBS Activities and Projects

design, fabricate, erect and evaluate cost-effective building systems with a focus on providing a computer integrated approach to these activities. Figure 2 illustrates the activities within the AIBS program; other projects supporting this program are shown in the four corners.

A family of structural systems, called ATLSS connections, is being developed with enhanced fabrication and erection characteristics. These ATLSS connections, in both concrete and steel, possess the capability of being erected by automated construction techniques. The research effort is to develop a general methodology as well as software and mechanical tools for automating construction activities to increase safety, productivity, and quality of the construction process at the job site. The first of these systems developed at the ATLSS Center is named the Automated Crane Erection System (ACES). ACES is an on-site material handling system designed for use in construction processes where material handling is crucial to efficient delivery of the finished structure. The range of application is from the framing process to the placing of facade.

ACES is a vehicle to show that integration of the various construction activities can lead to improved construction system performance; i.e. safety, productivity, and quality. ACES consists of: 1) a moving platform base, cable-driven, Stewart Platform used in locating, acquiring, moving, placing and securing structural and non-structural elements at the construction site; 2) construction elements incorporating ATLSS connections; 3) motion and sensor control software for movement within cluttered work sites subject to environmental disturbances such as wind gusts; and 4) the design and as built database. It is being used to demonstrate the application and use of the ATLSS connection in computer assisted erection of steel and concrete frames; the acquisition of site data and realization of an as built data base; and the planning, scheduling and delivery of material components to specific on-site locations at the appropriate time.

INTEGRATED BUILDING SYSTEMS DEMONSTRATION EFFORT

Construction Process

The current practice within the design, fabrication and erection fields of the construction industry is to perform the tasks independently either by a group of subcontractors or by various divisions of a single company. Because of this independence, it is possible and in fact common place to design a structurally sound system which is extremely difficult and costly to fabricate and/or erect. On site rework and plumbing, difficult to fabricate connections, and labor intensive processes are common. Thus, what on the surface may look like a cost effective approach may in fact be more costly than if the tasks were both planned and performed in a more integrated fashion.

It is recognized that structural weight reduction is not the only means of saving costs as shop and erection costs also depend on the machine and labor costs. The fact that careful selection of connections can significantly reduce the fabrication and erection costs has been documented [1]. Total cost reduction involves reducing the net cost of material, labor and time.

To consider the productivity issue we examine the "piece-hanging" process represented by the Petri Net of Figure 3. The net includes three loops associated with the "hookers-on", the "raising gang" and the "crane crew". These three groups of people each have a significant yet different function in the erection process. The hookers-on first select a member, then dress-it-up in preparation of the hooking step which is done with the crane crew. The crane crew then lifts the element and in cooperation with the raising gang allows the piece to be temporarily fastened. The crane crew then proceeds to lower the crane back down to the hooking area. The raising gang, upon completing the temporary fastening acquires additional connectors and move to the site where the next assembly is to occur.

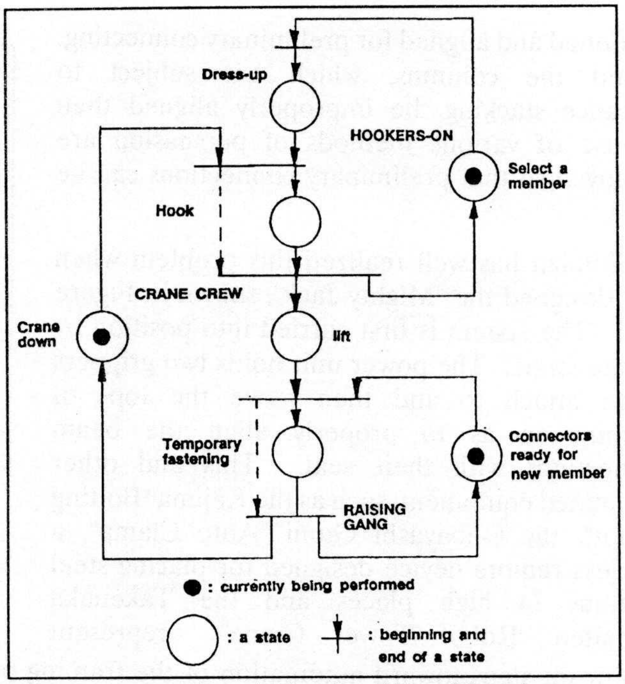

Figure 3 Petri Net for Piece Hanging

Of these three gangs, the crane crew is the slowest. The crane cycle time is typically two to ten times as long as the actual working time of either the hookers on or the raising gang. Not only is the crane the bottle neck operation within the piece-hanging process, it is the bottleneck in all processes that require material to be delivered on floors above ground level and in many cases the ground level itself.

The productivity of the site is further reduced by the times where the crane can actually function or be utilized. Although it is common practice to have cranes operate on a twenty four hour work schedule when possible, light winds may make it impractical to be used for approximately ten to forty percent of the time. These time losses directly drive the completion date.

To properly design connections and equipment for any process it must be well understood. Figures 4 and 5 exemplify the types of materials and holding systems found in piece hanging. Hear we see that spreaders, lashings, shackles or extraneous features are added onto the pieces so that they can be held. The parts are then hung from imprecise, none dexterous equipment and are subjected to environmental effects such as wind. Using these types of equipment, and aided by the raising gang, the pieces are moved through a tortious path so that they may be properly

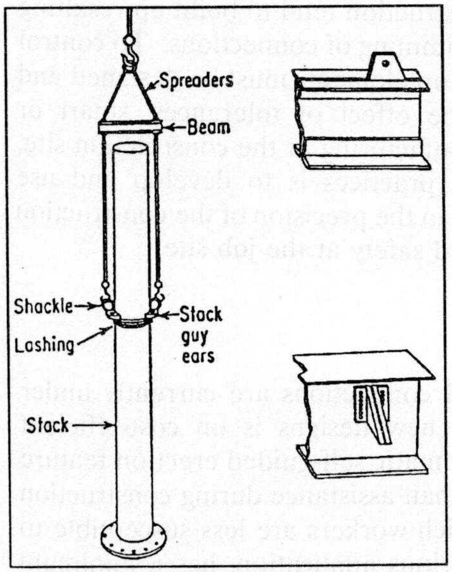

Figure 4 Handling and Holding

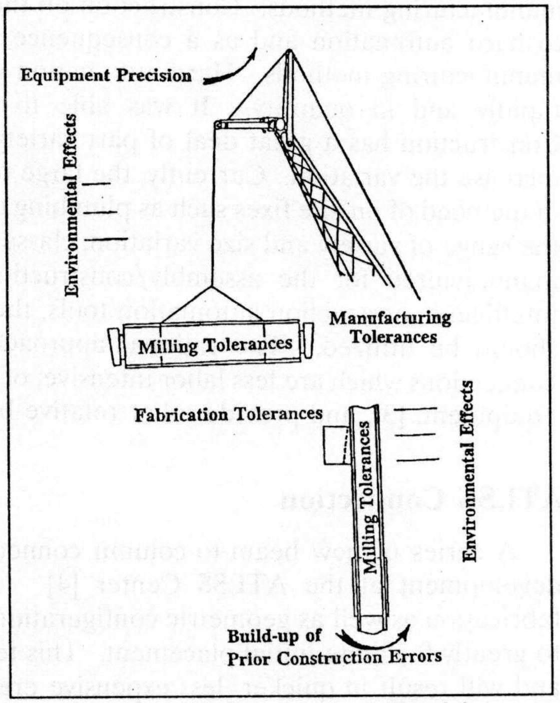

Figure 5 Tolerance and Precision

positioned and aligned for preliminary connecting. Should the columns, which are subject to tolerance stacking, be improperly aligned then the use of various methods of persuasion are employed so that preliminary connections can be made.

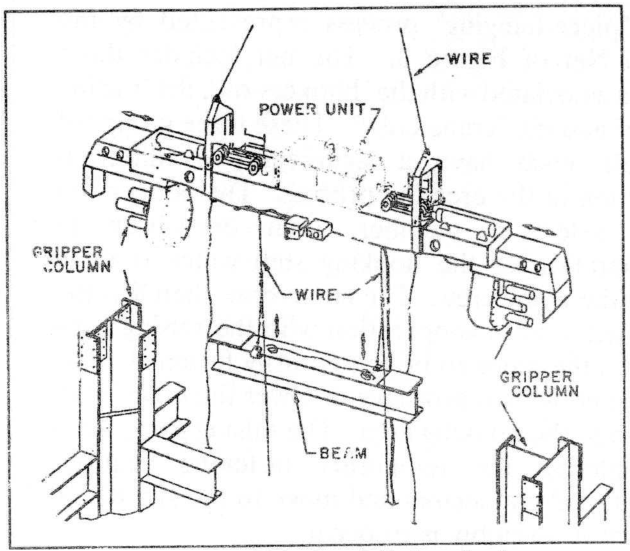

Figure 6 Shimizu Mighty Jack

Shimizu has well realized this problem when they designed the "Mighty Jack", shown in Figure 6 [2]. The system is first carried into position by a large crane. The power unit holds two grippers which attach to and then move the tops of columns so as to properly align the beam connections with their seat. This and other automated equipment, such as the Kajima "Bolting Robot", the Ohbayashi Gumi "Auto Clamp", a wireless remote device designed for placing steel columns in high places and the Takenaka Komuten "Robot Tower Crane" represent significant steps toward automation of the framing process. The chief drawback of these approaches is a lack of integration between the structural element, node design, task planning and the various classes of automation equipment. As an alternative, we have decided to redesign the connections for ease of assembly and, given the easier assembly process, to use a more robust crane geometry We believe that this integration is possible only with the development and use of a framing knowledge base which will include essential geometric and structural properties of the nodes and elements, element to node assembly and connection securing rules.

During the last fifty years, in most manufacturing arenas, we have seen changes in how things are produced. These changes were driven first by capacity and speed limitations as we moved from manual to hard automation and then by product variation and batch sizes as we moved more toward flexible manufacturing methods. Construction on the other hand has never made the large shift from manual to hard automation and as a consequence has found it difficult to shift toward the use of flexible manufacturing methods. Hard automation was driven by the need to produce a particular geometry rapidly and in quantity. It was able to perform by keeping product variation to a minimum. Construction has a great deal of part variety and size variation within a part type; tolerances further increase the variation. Currently, the large tolerances typical in construction tend to build up resulting in the need of on-site fixes such as plumbing of building floors and shimming of connections. To control the range of variety and size variation, classes or groups of construction elements must be designed and manufactured for the assembly/construction task. To control the effect of tolerances, smart or intelligent construction automation tools, the analog of flexible manufacturing at the construction site, should be utilized. The rational approach to good construction practices is to develop and use connections which are less labor intensive, of higher quality, matched to the precision of the construction equipment, [3], and provide other relative benefits such as improved safety at the job site.

ATLSS Connection

A series of new beam-to-column connections known as ATLSS connections are currently under development at the ATLSS Center [4]. The emphasis of these new designs is on cost-efficient fabrication as well as geometric configurations which provide an automatic self-guided erection feature to greatly facilitate initial placement. This feature will minimize human assistance during construction and will result in quicker, less expensive erection procedures in which workers are less susceptible to injury or fatalities. The connection is strong, can be scaled for various application, has a minimum number of parts and facilitates erection through top down placement.

The ATLSS connection concept is based on fundamental principals of mechanics dealing with wedging, jamming, orientation preference and the geometric design of connection pair geometries subject to equipment precision, part tolerances and dimensions [5]. One of the outcomes of the above is a preference for pairs of oblique elliptic cones. In the case of the ATLSS Connections, tapered male pieces are placed on the item being hung, for example, a beam, and these pieces slip into female guides mounted on the columns or other structural components. This is referred to as the keystone coupling and they have been designed as two-dimensional or three dimensional units as illustrated in Figure 7. In its purest form there exists no mechanical or welded connection and both keystone units depend on gravity alone to form a load transferring contact surface between the male and female connection parts.

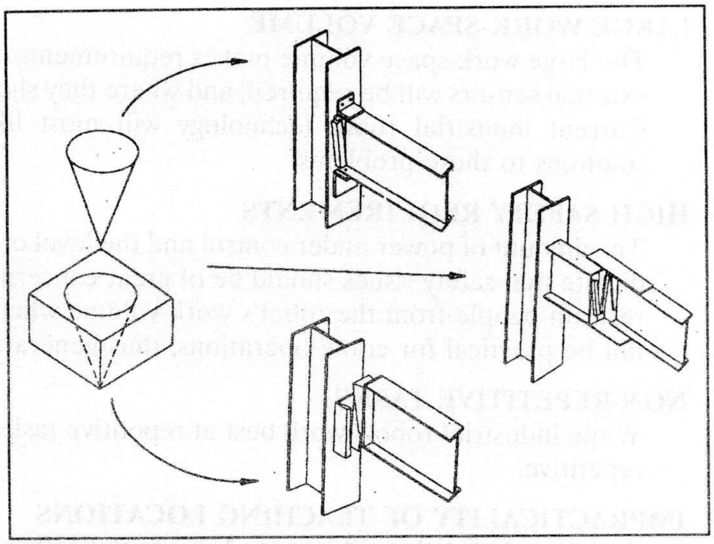

Figure 7 ATLSS Connection Concepts

We have determined a general method to determine the interrelationship between part geometry, tolerances and precision applicable to most assembly tasks and have applied the technique to determine the relative sizes of the ATLSS connection components so that it is tolerant of system imprecision and the buildup of tolerance stacks [3].

ACES DEVELOPMENT

The Problem

Recently, one of the authors conducted a detailed review of construction robots being developed and characteristics common to these robots [2]. He observed common conditions of where these robots were applied and likely features of where other robot applications exist in construction. Four rules were formulated: 1) The work environment is often dangerous and hazardous for human construction workers; 2) The tasks are repetitive. Many tasks performed by the human construction worker are repeated over and over; 3) The work requires mobility or transportability. Construction work is performed at various locations around the work site; and 4) The work requires intelligent-like behavior. Sensory perception, decision making and judgement are required to deal with variations in the work.

Today's cranes are gross motion systems which are swing sensitive to external loads such as wind, are not dexterous and are controlled manually with little or no external computer or sensory input. Other characteristics are:

- **LOW PRECISION AND ACCURACY**
  Large kinematic linkages and loads, such as weight, wind and thermal produce larger deflections and vibrations than obtained with industrial robots.

- **POOR STABILITY AND CONTROLLABILITY**
  Payload is hoisted with one cable (pendulum effect), therefore payload rotations are not controllable and positioning is underdamped.

- **LARGE POSITIONING UNCERTAINTY**
  Errors in measuring the relative position and orientation of linkage components are multiplied in large systems; there is an amplification effect on sensor errors and nonlinearities.

- **LARGE WORK-SPACE VOLUME**
  The large work-space volume makes requirements on external sensors, such as how many external sensors will be required, and where they should be located, extremely demanding. Current industrial robot technology will most likely render economically unfeasible solutions to these problems.
- **HIGH SAFETY REQUIREMENTS**
  The amount of power under control and the level of investment in equipment and product dictate that safety issues should be of great concern. It is common practice in industry to restrain people from the robot's work volume when it is in operation. This solution will not be practical for crane operations, thus generating a number of safety issues.
- **NON-REPETITIVE TASKS**
  While industrial robots work best at repetitive tasks, crane applications are typically non-repetitive.
- **IMPRACTICALITY OF TEACHING LOCATIONS**
  Positions and paths will have to be automatically generated and adjusted using database and sensor information. The industrial practice of teaching locations either on-line or off-line will be impractical.
- **LACK OF DESIGN FOR ASSEMBLY**
  Design for assembly is used with industrial robots to reduce precision requirements and simplify operations.

The ATLSS Solution

The desirable characteristics of tommorrow's cranes are systems with both large gross motion capability to move around the job site while being insensitive to wind gusts yet have fine motion capability for the final placement of the component. Systems which use externally obtained sensor and design data to assist or/and control the crane are also desirable. The system must have a self contained metrology system for location identification and precise measurement.

The automated construction of building components is currently possible because of recent advances in crane technology which are related to the development of the Stewart platform. A Stewart platform is actually two platforms connected by a series of six individually controlled linkages. Typically, hydraulic actuators are used to link the platforms together for applications such as manipulator arms and aircraft flight simulators.

A Stewart platform can also be assembled with six cables used as the linkages to move the lower platform and payload relative to the upper platform position as illustrated in Figure 8. Orientation of the cables is such that the system has properties of a space frame and this configuration not only provides excellent translational and rotational stiffness when compared to a boom crane but can also adjust the position and orientation of the lower platform with precision. The lower platform can

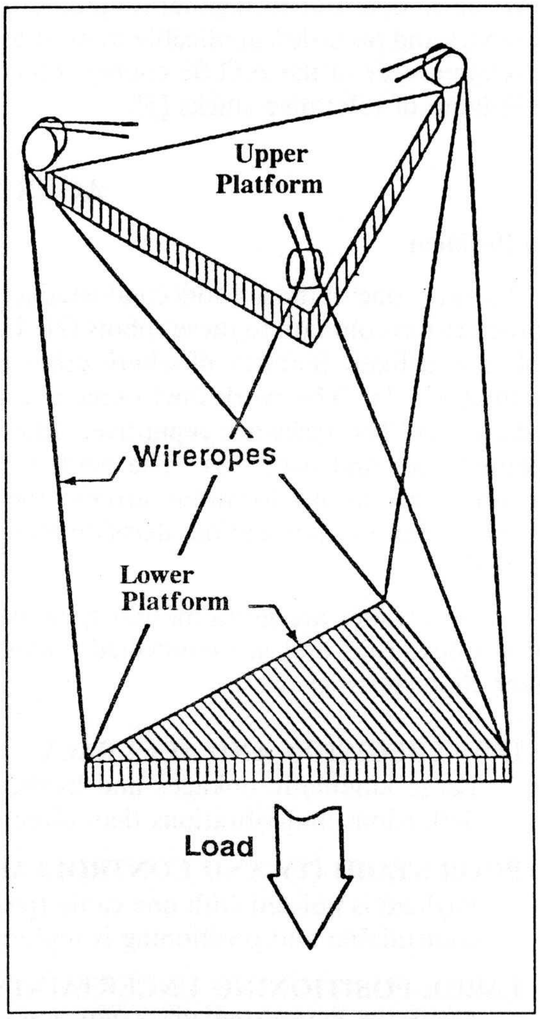

Figure 8 Cable Driven Stewart Platform

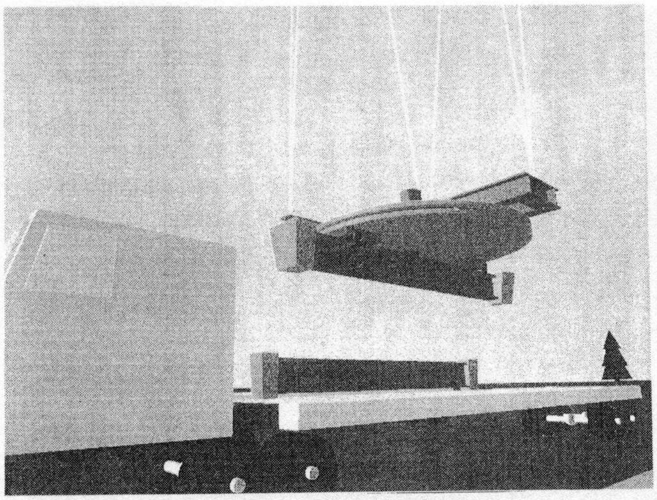

Figure 9 Beam Being "Picked" from Truck

move with six degrees-of-freedom to make insertion of ATLSS connections possible as shown in Figures 9 and 10.

Platforms can be designed and constructed with large work volumes and dexterity. Our current design allows a hung piece to be rotated around the vertical axis by +/- sixty degrees and about either horizontal axis +/- ninety degrees. Translational motion of the bottom platform relative to the top is such that the center of mass of the lower triangle must stay within a region slightly smaller than the upper triangle. Thus, if the upper platform is an equilateral triangle four meters on a side and the lower triangle is an equilateral triangle two meters on a side the horizontal translation is limited to approximately one meter in any direction. Vertical translations are limited only by the length of the cable at hand.

The Stewart platform is a rather stable and stiff system. The apparent stiffness is generated by a combination of the space frame nature of the geometry, the strain in the cables and weight of the payload. The heavier the payload the more resistant the platform becomes in the horizontal direction. The unit is stiffest at the center of its range of motion. Near the limits of each range forces in one or more cables decrease. Along with this cable force decrease comes a decrease in strain, stiffness and stability. The stiffness of the platform is an important factor when considering flight speed and susceptibility to wind effects.

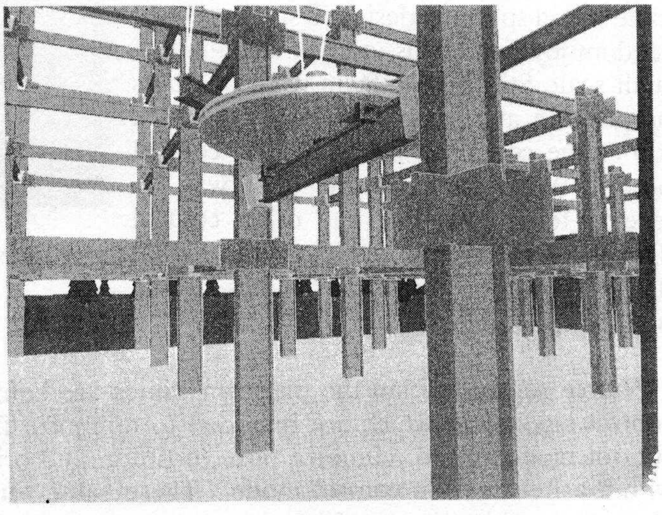

Figure 10 Beam Being "Placed" in Structure

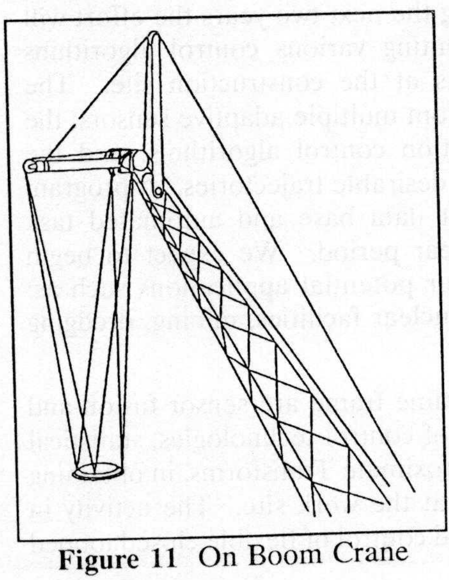

Figure 11 On Boom Crane

Stewart platforms can be placed on boom and tower cranes to greatly increase the platforms work volume [7], Figures 11 and 12. In these configurations the platform is subjected to large gyroscopic torques and centrifugal and Coriolis forces as it flies through it's trajectory. These forces and torques can be sensed and used within the controller to maximize the platform stability and flight speed thereby making efficient payload delivery possible.

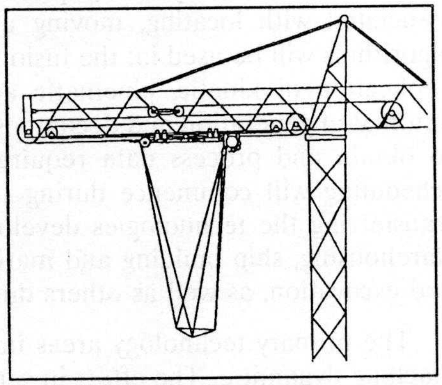

Figure 12 On Tower Crane

A scale-model Stewart platform crane, shown in Figure 13, has been constructed to test the feasibility and limitations of automated construction with these connections. Six servo-electric (DC) motors are used to control the cable lengths and lift a design payload of 1.1 kN at 0.15 m/s. We plan to replace the motors during the next year increasing the payload to 8.8 kN and the speed to 0.3 m/s. Currently payloads of up to 2.2 kN can be lifted at reduced speeds. By attaching the upper platform of the Stewart platform to a motorized trolley, the work volume of the crane system includes a 4 m lift, 4 m longitudinal run and 1.2 m of transverse movement.

Manual control of the Stewart platform crane uses a specially designed six degree-of-freedom joystick. This joystick is actually a small scale Stewart platform which outputs the position and orientation or the joystick grip as the command signal for the control loop. Work is currently underway to develop force reflective and other control algorithms which will feedback the actual platform position and cable forces to the joystick operator.

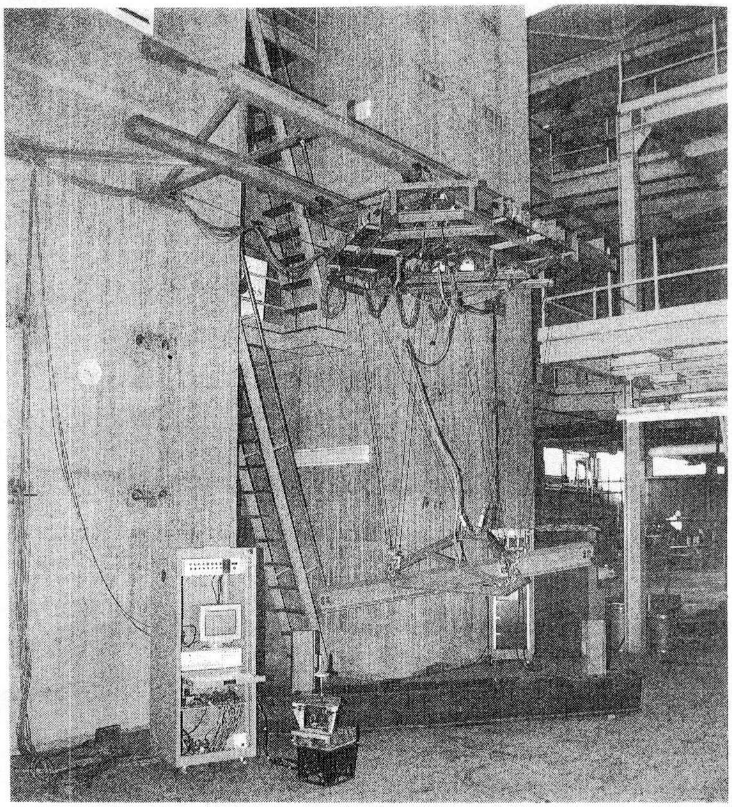

Figure 13 Scale Model Stewart Platform Crane

Force sensors within the platform cables are being used within cable slack and platform stability control algorithms which are intended to minimize flight time when the platform is in gross motion control mode and to minimize pose (position and orientation) errors when the platform is operating within a fine motion control mode. These same sensors will become part of the wind stabilization algorithm within the near future.

During the last year the primary focus of this ATLSS activity has been to develop, build and test the electrical, mechanical and low level control system of ACES. During the next two years the effort will be to increase the system capability by developing and implementing various control algorithms associated with locating, moving and placing material components at the construction site. The algorithms will be used in: the fusion and analysis of data obtained from multiple adaptive sensors; the application of kinetic, kinematic and dynamic gross and fine motion control algorithms; and the automated generation and decomposition of tasks required to define desirable trajectories. A program to obtain and process data required for generation of an as built data base and automated task scheduling will commence during the latter portion of that two year period. We expect to begin transferring the technologies developed within this research to other potential applications such as: warehousing, ship building and maritime use, decommissioning of nuclear facilities, mining, dredging and excavation, as well as others during this same time period.

The primary technology areas involved in the above mentioned time frame are sensor fusion and machine dynamics. The effort in sensor fusion will examine the use of control technologies, statistical and kinematic analysis techniques, such as Kalman Filtering and Approximate Transforms, in obtaining local and global estimates of the location of construction elements at the work site. The activity in machine dynamics will concern itself with the kinematics, dynamics and control of flexible closed looped machines.

Our plans include the development of a vision system as illustrated in Figure 14. Automatic operation then becomes possible by integrating the vision system into the manual operation control loop. The installation of a vision system would also allow the development of an automated crane erection system which not only erects the building, but also assists with on-site material storage and inventory management. We have built and tested a preliminary version of the vision control algorithm which will allow the crane to sense the actual pose of the payload relative to the delivery site while being moved [6]. This involves the use of actively controlling the camera focal length and field of view under uncertainty conditions presented by the crane and those associated with the construction site.

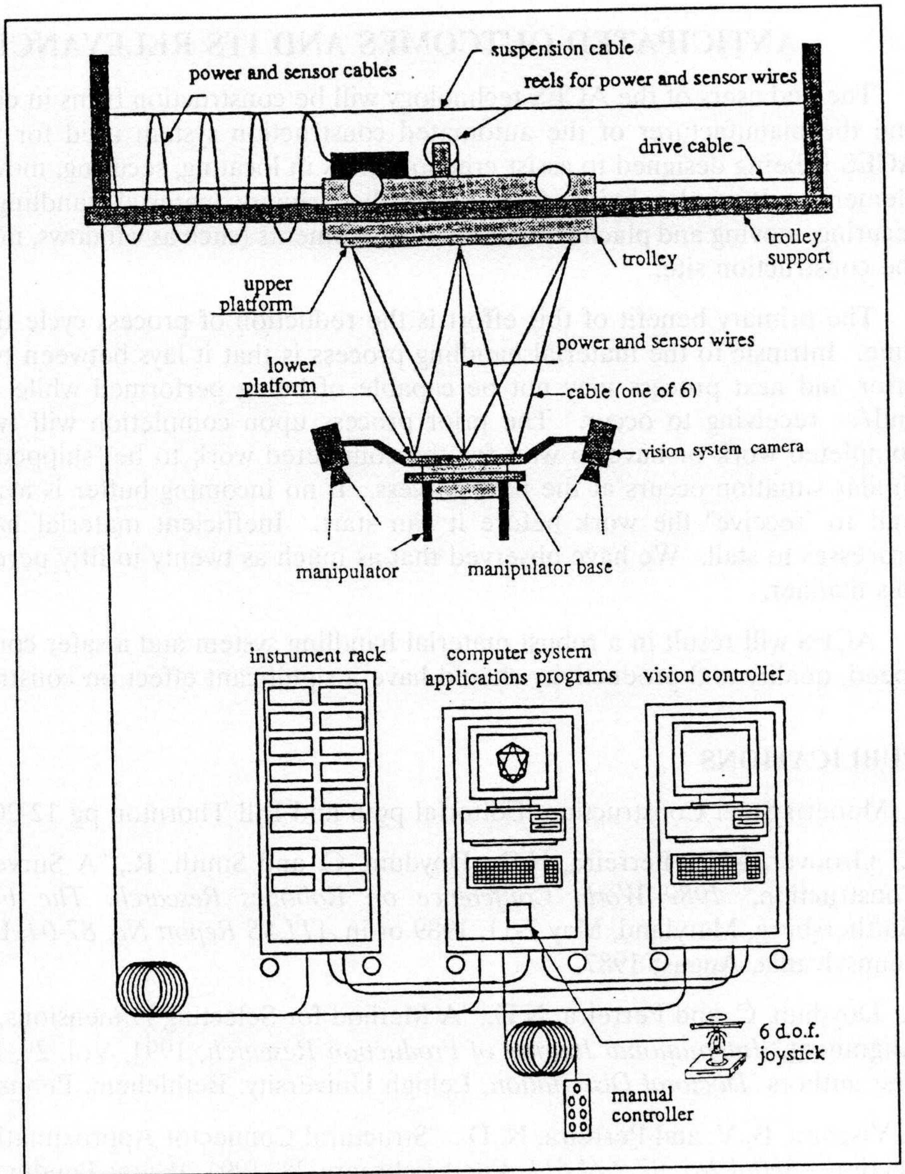

Figure 14 ACES Hardware

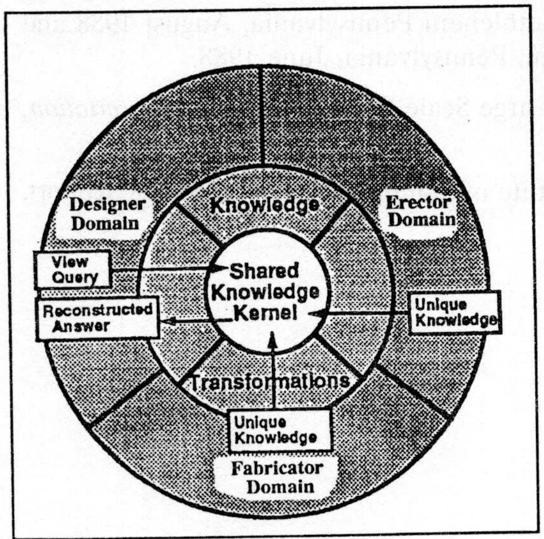

Figure 15 Knowledge Sharing

Knowledge Based System for Planning

In a related ATLSS project, information and knowledge of designers and fabricators is being utilized by a knowledge base system to aid in the automated design of cost-effective connections, Figure 15. In the near future that knowledge and data will be used to develop automated building erection scheduling and trajectory control plans. Vision and other sensing information will be used to create an as built data base which will then be used to automatically update interior designs for piping layouts as well as others. Thus the sensing and knowledge base systems described here become the basis for the information gathering and processing system for successful conclusion of the construction process and for monitoring of building life cycle performance, Figure 2.

ANTICIPATED OUTCOMES AND ITS RELEVANCE TO PRACTICE

The end users of the ACES technology will be construction firms in charge of building the structure and the manufacturer of the automated construction system used for the erection of the structure. ACES is being designed to assist erection firms in locating, securing, moving and placing the structural elements. It is also being designed as the primary material handling system capable of locating, securing, moving and placing non-structural elements (such as windows, facade, and the like) throughout the construction site.

The primary benefit of this effort is the reduction of process cycle time through reduction of idle time. Intrinsic to the material handling process is that it lays between two other processes. Both the prior and next process may not be capable of being performed while they are waiting for shipping and/or receiving to occur. The prior process upon completion will typically use a buffer to place completed work or have to wait for the completed work to be "shipped out" to the next process. A similar situation occurs at the next process. If no incoming buffer is available, the next process must wait to "receive" the work before it can start. Inefficient material handling can thus cause these processes to stall. We have observed that as much as twenty to fifty percent of time may be wasted in this manner.

ACES will result in a robust material handling system and a safer construction site. The improved speed, quality and productivity should have a significant effect on construction costs.

PUBLICATIONS

1. Modern Steel Construction, Editorial pg 6 and Bill Thornton pg 12-20, February 1992.

2. Groover, M.P., Perreira, N.D., Doydum, C. and Smith, R., "A Survey of Robotics Technology in Construction," *1989 World Conference on Robotics Research: The First Five Years and Beyond*, Gaithersburg, Maryland, May 7-11, 1989 or in *ATLSS Report No. 87-04*, Lehigh University, Bethlehem, Pennsylvania, August 1987.

3. Doydum, C. and Perreira, N.D., "A Method for Selecting Dimensions, Tolerances and Precision for Alignment," *International Journal of Production Research*, 1991, Vol. 29, No. 5, pp 1035-1052 or in the first authors *Doctoral Dissertation*, Lehigh University, Bethlehem, Pennsylvania, December 1990.

4. Viscomi, B. V. and Perreira, N. D., "Structural Connector Approximating a Cone of Elliptical Cross-Section " *Serial No. 07/622,611*, Filed February 28, 1991, Patent Pending.

5. Nguyen, V. X. and Perreira, N. D., 1988, "A Chamfered Connection for Use in Automated Framing of Buildings," *ATLSS Report No. 88-06*, Lehigh University, Bethlehem Pennsylvania, August 1988 and in an associated *Masters Thesis*, Lehigh University, Bethlehem, Pennsylvania, June 1988.

6. Macedo, J., "Active Reduction of Location Uncertainty in Large Scale Robots", *Doctoral Dissertation*, Lehigh University, Bethlehem, Pennsylvania, August 1991.

7. Albus, J. S., " A New Type of Robot Crane," National Institute of Standards and Technology Report, Gaithersburg, Maryland, July 1991.